ROHS

POLES	PART NO	DIMENSIONS(mm)	
		A	B
2	2	3.96	7.92
3	3	7.92	11.88
4	4	11.88	15.84
5	5	15.84	19.8
6	6	19.8	23.76
7	7	23.76	27.72
8	8	27.72	31.68
9	9	31.68	35.64
10	10	35.64	39.6
11	11	39.6	43.56
12	12	43.56	47.52
13	13	47.52	51.48
14	14	51.48	55.44
15	15	55.44	59.4
16	16	59.4	53.36

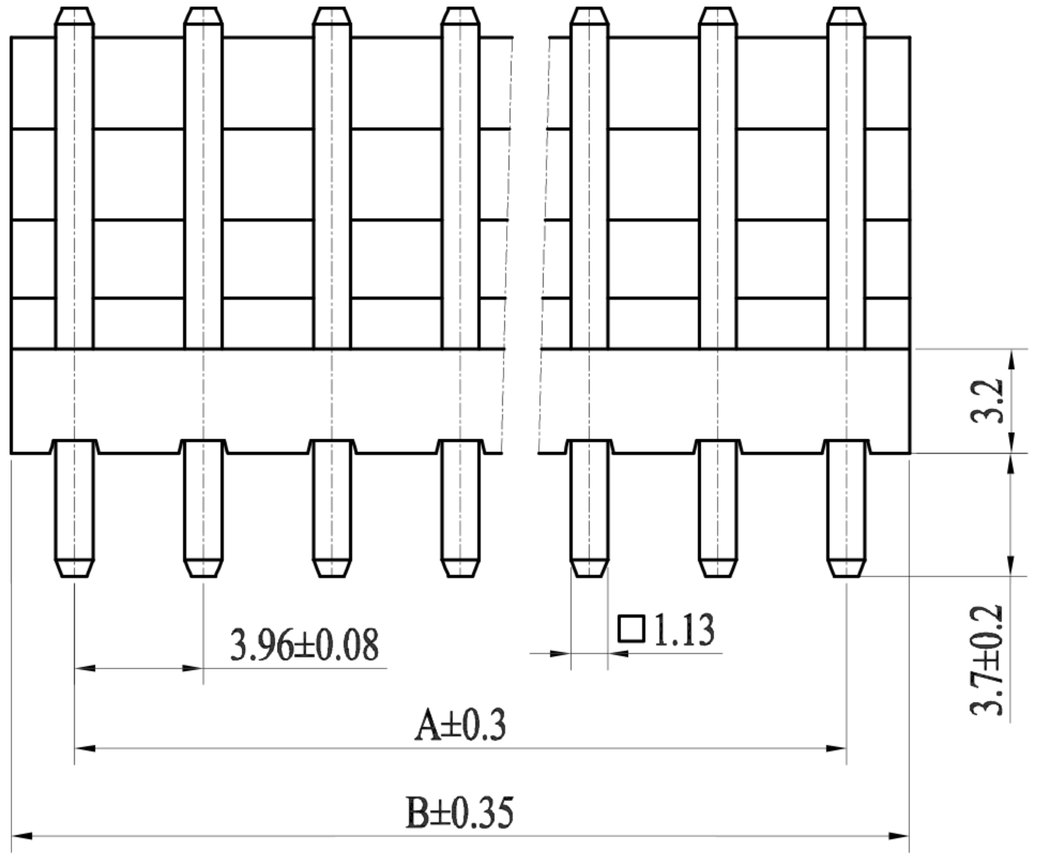

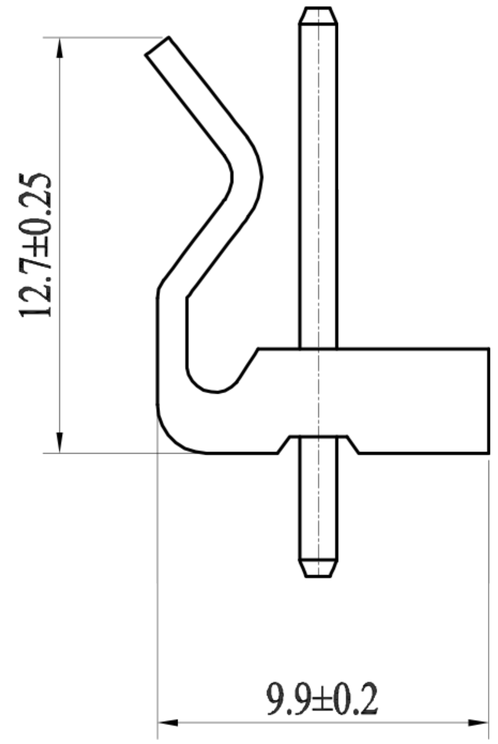

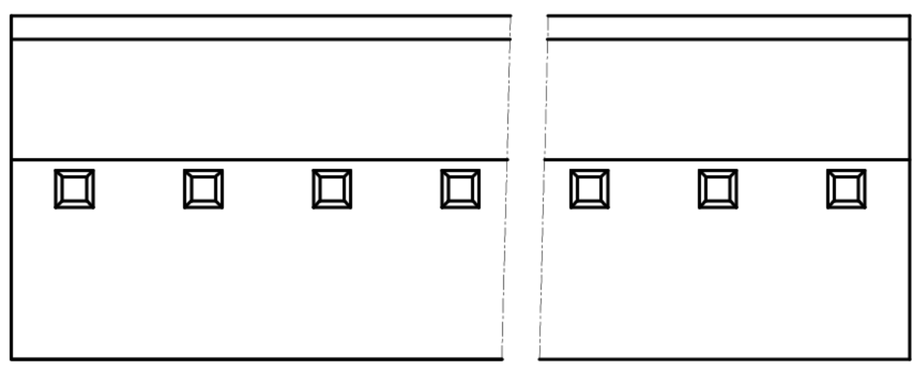

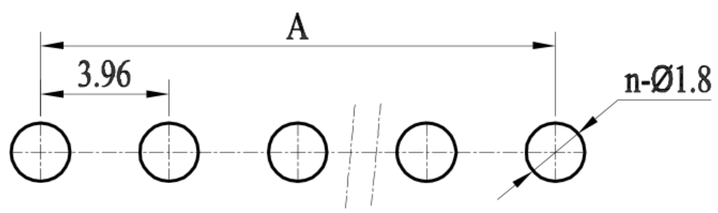

PCB寸法
PCB LAYOUT

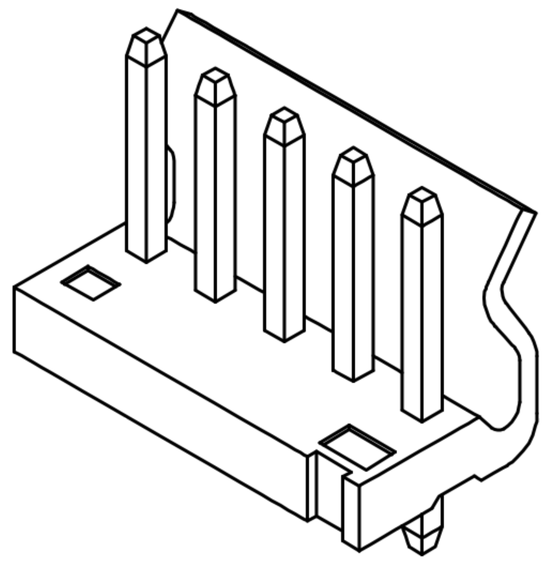

■ 技术参数（SPECIFICATIONS ）

- ◆ 额定电压：250V AC DC
  Voltage rating: 250V AC DC
- ◆ 额定电流：5.0A AC DC MIN
  Current rating: 5.0A AC DC MIN
- ◆ 耐压值: 1500V AC/minute
  Withstand voltage: 1500V AC/minute
- ◆ 绝缘电阻：1000MΩ MIN
  Insulation resistance: 1000MΩ MIN
- ◆ 接触电阻：0.02Ω MAX
  Contact resistance: 0.02Ω MAX
- ◆ 工作温度: -25°C ~+85°C
  Working Temperature: -25°C~+85°C
- ◆ 间距：3.96 mm
  Pitch: 3.96 mm

■ 材料（MATERIAL ）

- ◆ 外壳：尼龙66
  Housing: PA66

ECN NO.	REV.	DATE.	DESCRIPTION.	CHANGE.	CHECK.	APPRO.
———	A	———	NEW	———	———	———

APPROVALS		DATE
DRAWN	ZHIWEI.CHEN	2015.07.07
CHECKED		
APPROVALS		

深圳市联丰盈电子有限公司
SHENZHEN LINFENYING ELECTRONIC CO.,LTD

TOLERANCES ARE			ANGLE
	30~以上	±0.30	±2°
	10~30	±0.20	
	5~10	±0.15	
	~ 5	±0.10	

TITLE:		
PART NO.	GP01-3960WV-NP	
UNIT: mm	SCALE: 1:1	PROJ:
DRAWING NO.	———	SHEET 1 OF 1