ROHS

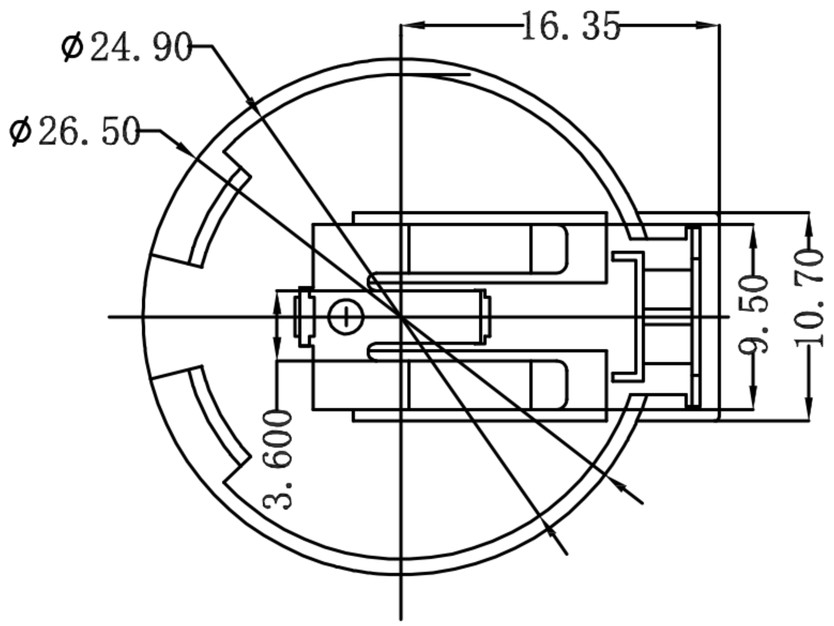

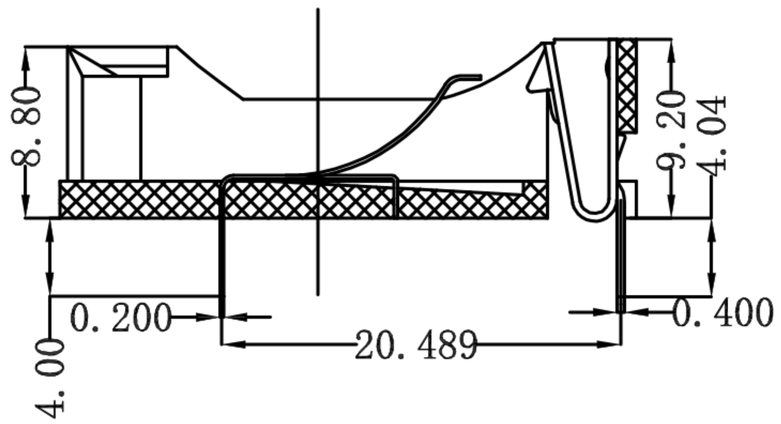

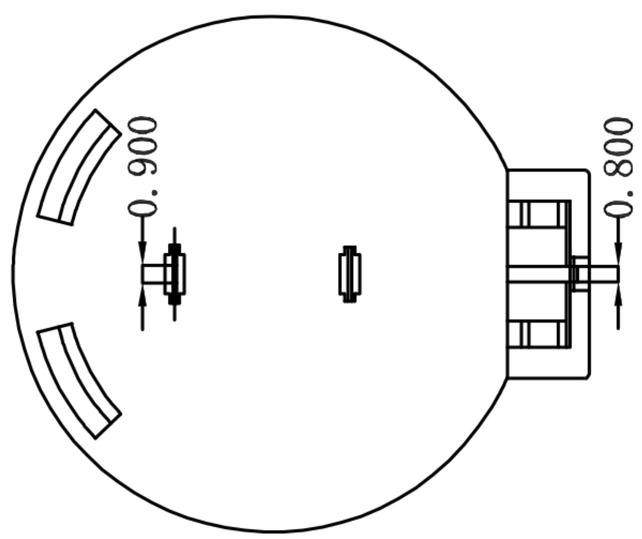

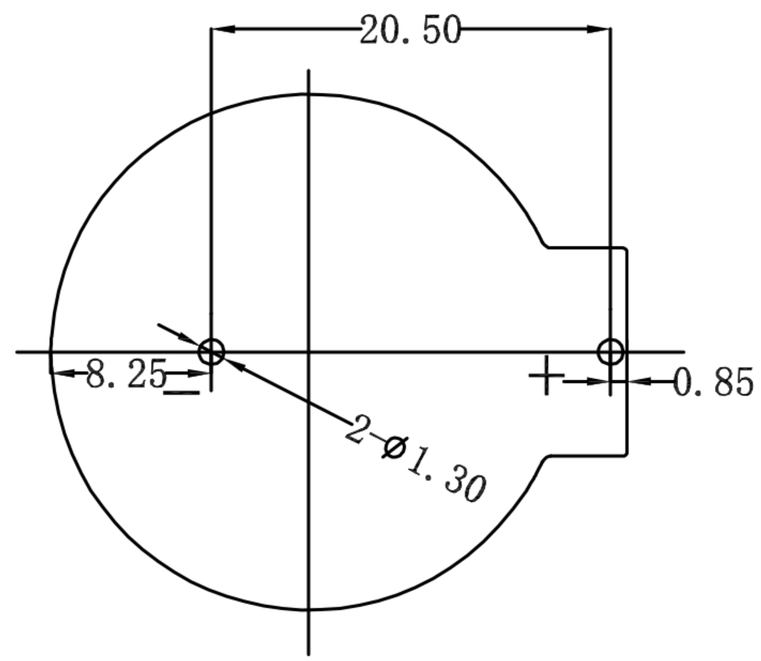

PCB Layout Diagram
Top View

NOTE:
1. MATERIAL:
   a. HOUSING:PA9T 250°
   b. CONTACT:PHOSPHOR BRONZE
      (SURFACE PLATING: Ni100u″)
      SEE ORDERING INFORMATION
2. ELECTRIC:
   a. CONTACT RESISTANCE: 30 MILLIOHMS MAX
   b. INSULATION RESISTANCE: 1000 MEGA OHMS MIN
   c. DIELECTNIC VOLTAGE: 500V AC ONE SEC LEVEL
   d. OPERATING TEMPERATURE: -25° C~ +85° C

NO.	PART NAME	Q'TY	MATERIAL	PLATING & COLOR
3	TERMINAL(-)	1	PHOSPHOR BRONZE, T=0.20MM	Ni-Plating
2	TERMINAL(+)	1	PHOSPHOR BRONZE, T=0.40MM	Ni-Plating
1	HOUSING	1	PA9T	BLACK

ECN NO.	REV.	DATE.	DESCRIPTION.	CHANGE.	CHECK.	APPRO.
———	A	———	NEW	———	———	———

APPROVALS		DATE
DRAWN	ZHIWEI.CHEN	2015.07.07
CHECKED		
APPROVALS		

深圳市联丰盈电子有限公司
SHENZHEN LINFENYING ELECTRONIC CO.,LTD

TOLERANCES ARE			ANGLE
	30~以上	±0.30	±2°
	10~30	±0.20	
	5~10	±0.15	
	~ 5	±0.10	

TITLE:	电池座
PART NO.	GP07-CR2450-01
UNIT: mm	SCALE: 1:1
PROJ:	
DRAWING NO.	———
SHEET 1 OF 1	